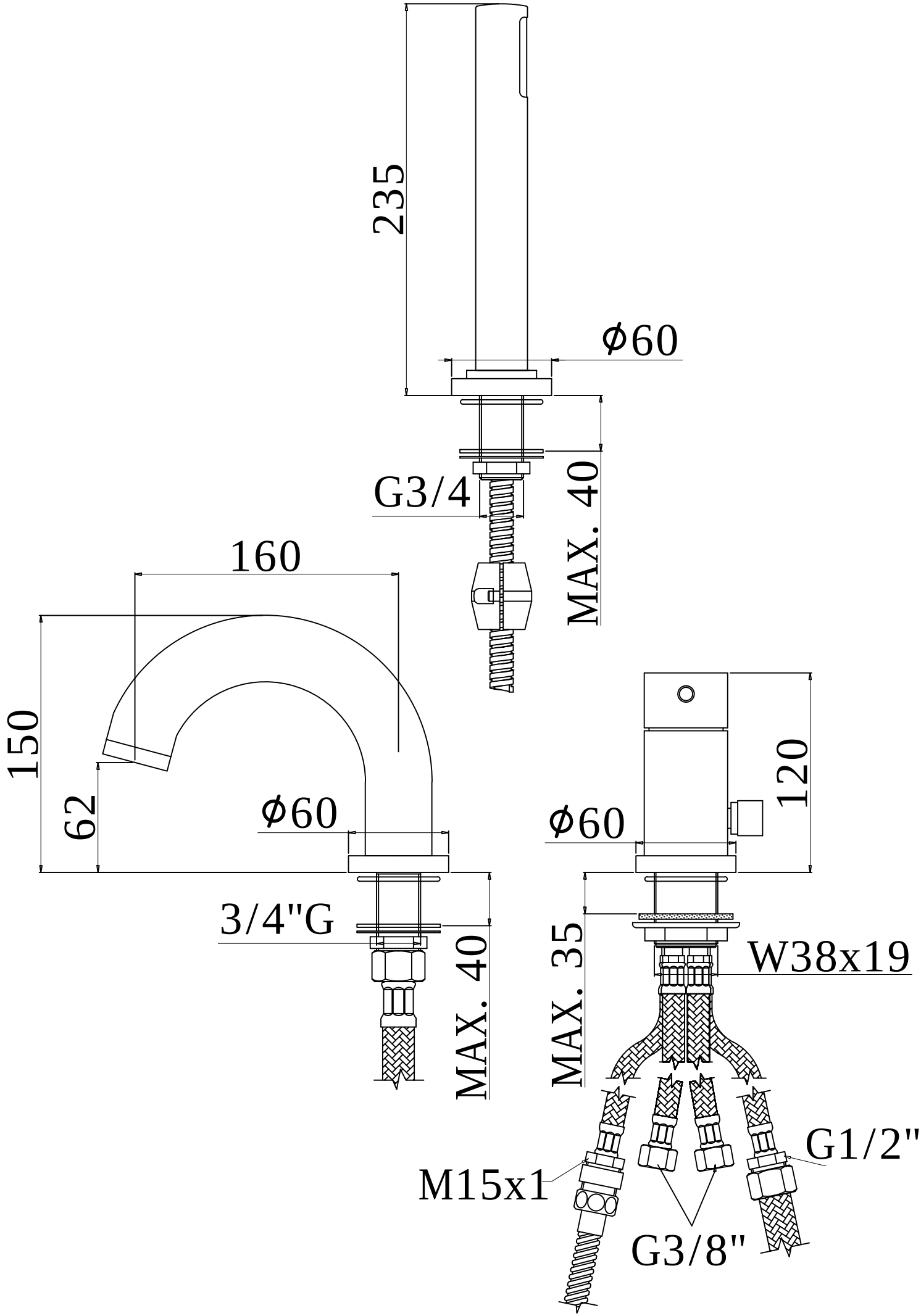
235
ϕ60
G3/4
MAX. 40
160
150
62
ϕ60
3/4"G
MAX. 40
120
ϕ60
MAX. 35
W38x19
G1/2"
M15x1
G3/8"